微波爐使用手册

型號：C2503

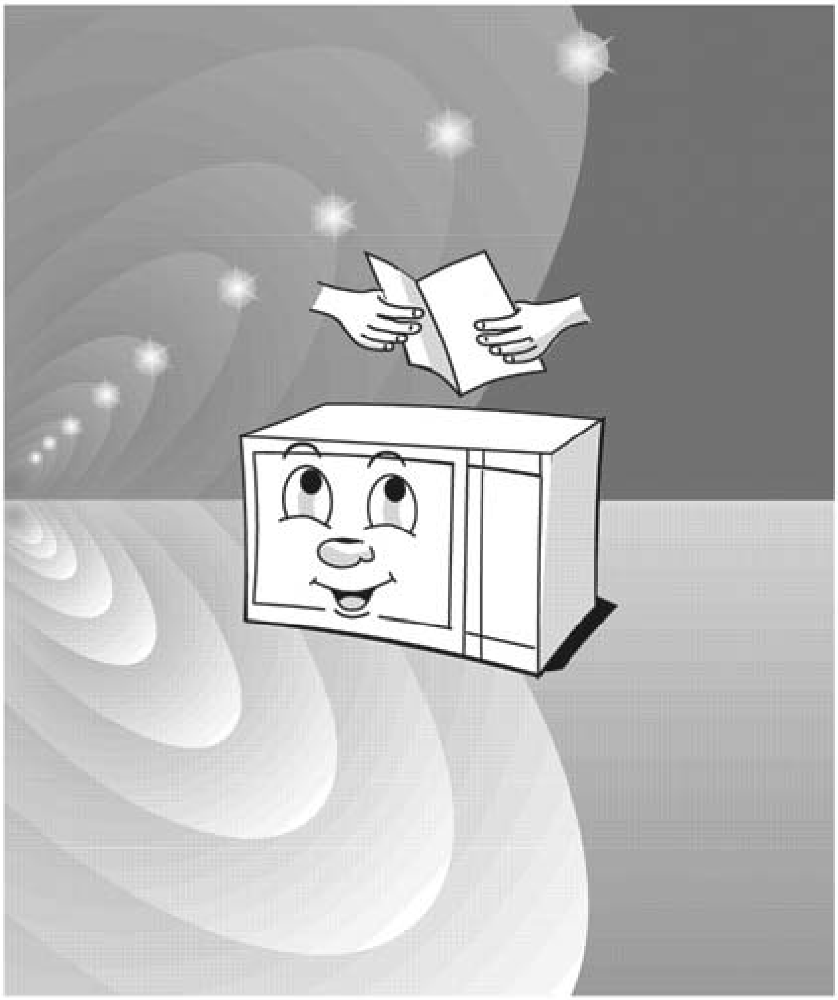

Whirlpool

請在安裝和使用此微波爐前詳細閱讀本使用手册,并保存好以備日後參考。

目録

避免微波泄露預防措施 1
規格 1
使用常識 1
安裝 2
接地説明 2
收音幹擾 3
重要安全説明 3
微波煮食守則 4
使用器皿指南 4
圖示 4
控制面板説明 5
操作指導 6
清潔維護 8

避免微波泄露預防措施

（a） 不可在門開的情况下使微波爐工作， 更不可破壞門連鎖系統，從而造成微波能量的泄露。

（b） 不要放置任何物體在門窗前面或允許油污積漬在門窗表面需要清洗。

（c） 在危險的情况下，不要操作微波爐，下面這些是非常重要對于恰當的關門而不會存在危險：

1 門,

2 鉸鏈和門鈎（斷裂或鬆脱）,

3 門窗和門窗表面。

（d） 微波爐必須由專業的人士進行維修。

（e） 如果門或門封損壞，則不能操作微波爐，直到維修人員修好爲止。

規格

型　　號	C2503
額定電壓＼額定頻率＼額定輸入功率	230V~50Hz，1400W
微波輸出功率	900W
額定微波頻率	2450MHz
外形尺寸	310mm(H)X 508mm(W)X 440mm(D)
内腔尺寸	237mm(H)X 338mm(W)X 348mm(D)
内腔容量	25L
均匀性	314mm
净　重	16.3Kg

使用常識

在微波爐不能够正常工作的情况下，注意：

A） 檢查確保電源綫插頭是否鬆脱，否則，請重新插好插座。

B） 檢查主電路電流保險絲是否熔斷或電路是否通路，否則，更换另外一個插座再試 。

C） 檢查確保控制面板程序没有任何問題和定時器完好。

D） 檢查確保門是否關好和安全連鎖系統正常，否則，微波能量將不會產生。

如果以上問題都没有出現，則需要聯系維修服務人員，必須由專業維修人員檢修，其它任何人拆修將是危險的。

下列情況均屬正常	
微波爐燈光暗弱	烹調時若不以微波高火而用較低的火力烹調，微波爐的燈光會變得暗弱并有聲響產生，這是微波爐在控制火力時所產生的正常現象。
蒸氣凝聚在爐門及有熱風從排氣口排出。	烹調時，食物會有蒸氣散發，而大部分會從排氣口排出，但蒸氣也會在較凉的地方如爐門上凝聚，這是正常現象。
使用微波燒烤組合時，微波爐會有聲響發出。	這些聲響是因爲微波爐自動交替轉換微波火力和燒烤火力，實現微波燒烤功能而產生，故這屬於正常現象。
當使用微波燒烤組合及單燒烤功能時，微波爐有白烟冒出及產生异味。	微波爐必須定期洗擦幹净，特别在使用微波燒烤組合或單燒烤功能後。任何積聚在爐頂及爐壁的油漬，都會引起白烟冒出。
當使用微波燒烤組合及單燒烤功能時，外殼頂部會向上略凸起。	這是由于在石英燒烤管發熱時，其温度很高，在其上面的外殼部位受熱膨脹，而發生變形，略向上凸起，如果長時間使用，該部位會略變黄，這是屬于正常現象。
當使用微波燒烤組合及單燒烤功能時，前門板會向内略凹陷。	這是由于爐腔内温度很高，腔内氣壓很低，使前門板受向内氣壓壓力而略向内凹陷，這是屬于正常現象。
電壓波動，會影響微波或燒烤的烹調時間及效果。	當電壓在一定的範圍内波動時，微波爐仍能工作，衹是受電壓偏高或偏低的影響，輸出功率會相應升高或降低，故烹調時間及效果會有所變化，這是屬於正常現象。

安裝

1） 把微波爐内的包裝物全部取出。
2） 應仔細檢查微波爐有否損壞。如有損壞，請立即聯絡專業的維修服務人員。
3） 此微波爐應放置在有足够承托力的水平面上。
4） 本微波爐應放在通風幹燥、無腐蝕性的環境中使用，遠離高温及蒸汽。
5） 切勿在爐頂放置任何物件，并保持與頂部壁橱距離至少 20CM，微波爐兩旁應與墻壁距離至少 10CM。
6） 在無玻璃盤、滚輪支架未放置好的情况下，不要工作微波爐。
7） 確保電源綫没有危險和不放置在微波爐下面或經過熱的鋒利的表面。
8） 檢查插座是否有問題。
9） 不可在户外使用微波爐。

接地説明

爲了防止觸電，必須確保此微波爐接地良好。任何不合適的接地都可能導致電擊的危險。

注意： 1） 如果對接地或電路説明有疑問，可以聯系專業的維修服務人員。
2） 制造商和分銷商都有權利由于微波爐電子電路設計失誤所造成的危險負責。

電源綫不同綫顏色表示的方法：

黄緑色： 接地綫

藍色： 零綫

褐色： 火綫

收音幹擾

1、在微波爐工作的時候可能對收音機、電視或同類設備産生幹擾。

2、當存在幹擾的時候，可以采取下列措施減少或避免：

A） 清潔微波爐門和爐腔。

B） 適當調整收音機或電視的天綫。

C） 適當地調整微波爐和接收機的位置。

D） 使微波爐遠離接收機。

E） 使微波爐和接收機使用不同的插座從而避開幹擾。

重要安全説明

警告：在使用電子電氣産品中，爲減少電擊、着火、微波泄露或對人體造成傷害的危險，使用者需要按照下列規則了解基本安全預防措施。

1 使用前請詳細閲讀“使用手册”的全部内容。

2 本微波爐專爲家庭加熱及烹調事物而設計，故不使用于其它商業用途。

3 無食物時，請不要使微波爐工作，以免空載運行損壞微波爐。

4 如果電源綫和插頭有問題，不要運行微波爐，電源綫如果存在故障，必須由專業的維修人員更换。

5 警告： 衹有在已經提供充分的指導以致兒童能够采用安全的方法使用微波爐，并且明白不正確的使用會造成危險時，才能允許兒童在無人監控的情况下使用微波爐。

6 爲防止食物在腔體着火；

A 當食物在塑料、紙或其它可燃材料制成的容器中加熱或烹調時，應時時注意，防止起火。

B 在加熱紙包裝的食物時應去掉一些金屬帶子。

C 烹調中發生冒烟或起火現象時，請不要立即打開爐門，否則遇空氣會加大火勢，同時需立即切斷電源。

D 不能用微波爐儲存任何物品。

7 警告： 不要直接加熱裝載在密封容器内的液體或其它食物，因爲這樣有可能會發生爆炸。

8 用微波加熱可能會導致液體食物沸騰爆破延遲，注意，應打開爐門後，略擱置一會兒，再取出食用。

9 不可用微波爐煎炸食物。

10 切勿煮帶殼蛋，壓力會使暴裂，另外蛋黄、蛋白也要用牙簽刺穿數次。

11 表面無孔的食物（如蛋、板栗、土豆、香腸），請去皮或在外皮上開一裂縫或叉幾個小孔，否則受熱膨脹可能發生暴裂。

12 奶瓶和嬰兒食品罐應經過攪拌或摇動，喂食前應檢查瓶内食物的温度，避免燙傷。

13 從微波爐内提取食物和器皿時，應當使用鍋夾或戴上隔熱手套，以免高温燙傷。

14 用户使用之前，應檢查所使用的器皿是否適用于微波爐。

15 警告： 除有資格的維修人員外，其他人來執行檢修操作都是危險的，包括拆下防止微波能量泄露的防護蓋等操作。

16 不要使用幹燥的抹布、 紙等易燃的材料置于腔體內面， 否則在工作的時候遺留下的粹屑在腔體內會着火，若烹調中發生冒烟或起火現象時，請不要立刻打開爐門， 否則空氣會加大火勢，應立即切斷電源，拔掉插頭。

17 烹調食物，需防止過熱起火。

18 微波烹調是若使用塑料、紙包裹食物加熱時許仔細觀察，切勿離開，因爲塑料在過熱的情況下會熔化、包裝紙會燒焦。

19 不可阻塞外殼上的通風口，否則會造成危險或比較差的烹調效果。

微波煮食守則

1、小心放置食物，注意將厚的一面向上面放置。
2、注意調整烹調的時間，將定時器旋轉到合適的位置再小心增加時間以免食物過熱發焦或燃燒。
3、在烹調的時候需要翻轉食物。
4、在烹調鷄或漢堡包需要翻轉食物，如果是烘烤則需要不斷翻轉食物。
5、將食物放在器皿中烹調，注意使食物的各個面受熱均勻。
6、影響烹調時間的因素有：所喜歡的煮熟程度、食物的初温、形狀的大小、重量、和使用器皿的形狀、大小以及事物的排列、遮蓋、翻轉等，參照這些因數，適當調整烹調時間。

器皿指南

1、微波器皿材料可以通過微波來加熱盛在微波器皿中的食物。
2、微波不能穿過金屬，因此金屬器皿或盤子不允許使用。
3、不能够用回收紙包裹食物加熱，因爲回收紙中可能含有小顆粒的金屬從而産生火花。
4、圓形盤子好過方形盤子存放食物加熱。

注意　根據不同烹調方式，選用合適的器皿十分重要。如果選擇不當，不僅會影響烹調的效果，而且還會造成損壞器皿或微波爐的不良後果。

下表中○爲適用，×爲不適用。

	微波
耐熱玻璃	○
陶、瓷器	○
一般玻璃	×
耐熱塑料	○
金屬	×
微波保鮮膜	○
金屬網架	×
金屬器皿	×

圖示

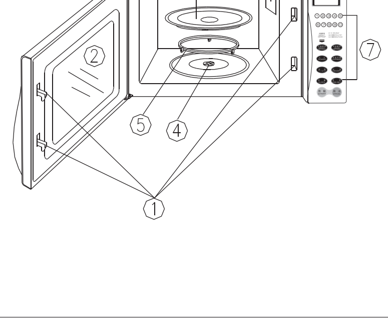

1 門安全聯鎖開關—確保 爐門打開，微波爐不能工作；爐門關上，微波爐才能工作。

2 視屏窗 — 有金屬屏蔽層，可透過網孔，觀察食物烹調情況。

3 波導口— 磁控管發射微波進入腔體的通道(裝有雲母片，切勿拆卸)。

4 軸 — 帶動玻璃轉盤轉動。

5 轉盤支承 — 支承玻璃轉盤并按其軌道轉動

6 玻璃轉盤 — 裝好食物的容器放在轉盤上，加熱時轉盤轉動，使食物烹調均勻，以達到理想均勻烹調的效果。

7 控制板 — 詳見控制

控制面板説明

注： 此控制面板圖案若有變動，恕不另行通知。

顯示窗説明

顯示時間、功率、功能和剩餘時間

數字鍵

用于設置時間：分鐘、秒 或重量

按重解凍

按重量將冷藏肉類、家禽、海鮮解凍。

衹需將食物的種類和重量輸入，微波爐會自動選擇解凍時間及火力。

快速解凍

用時間來控制解凍冷藏食物。

解凍程序會自動從中高火至中低火再降至低火操作。

解凍進行時，快速解凍 燈和烹調顯示燈將同時亮起。

火力

用來輸入所需火力

預置

用以指令微波爐在預定時間（12 小時内）自動工作。輸入預置程序前，必須將時鐘校正。微波爐正處于預置狀態，預置 顯示燈將會不停地閃爍。

時鐘

用來輸入當日時間或重現當日時間。

當微波爐操作時，時間會自動顯示。

當微波爐發生故障或切斷電源，必須重新調校時間。

取消

按取消鍵可以取消前面輸入的火力、烹調或解凍時間，而當日時間不會被取消。

記憶

如選擇用時間烹調食物，可按 記憶 鍵 MEMORY 選定在第一階段及第二階段烹調微波爐上的顯示燈顯示出微波爐正進行的烹調階段。

時間：

用來輸入烹調時間。

烹調時間最長可選擇到 99 分 99 秒。

快速烹調

可利用此功能選 4 種慣用的烹調時間。

用 快速烹調 程序進行時，微波爐將以微波高火力烹調。

啓動

按 啓動 鍵 START 可以啓動已輸入的解凍或烹調程序。當程序開始時，烹調顯示燈和爐

燈便會亮起，通風風扇和轉盤也會開始轉動。

操作指導

提示：

每次按鍵都會聽見“嘀”的一聲

設置時鐘：

步驟：

1：按“時鐘”鍵

2：按“取消”鍵

3：選擇數字鍵輸入時間（小時和分鐘分別用一個數字和兩個數字輸入）

4： 再按“時鐘”鍵

注意：

該微波爐顯示的時鐘是 12 小時制， 如 1：01 ，若要重新設置時間，可以重復上述步驟。

設置烹調時間

步驟

1： 按“時間”鍵

2：使用數字鍵輸入烹調的時間，輸入的數字按照先秒後分鐘的方式從左至右顯示

3： 按“火力”鍵

4：按數字鍵“0”

5：按“啓動”鍵

注意：在烹調的過程中，按“時間”鍵，然後按“取消”鍵可以結束烹調。

設置時間和火力

A：階段 1

1：按“時間”鍵

2：使用數字鍵輸入烹調的時間，烹調時間最長可選擇到 99 分 99 秒。

3： 如需要設置其它的火力檔，按“火力”鍵， 然後使用數字鍵輸入 1~9 不同的火力檔。

4：按“啓動”鍵開始烹調

不同數字鍵對應的火力分配情況

顯示	火力輸出
9	90%功率輸出
8	80%功率輸出
7	70%功率輸出
6	60%功率輸出
5	50%功率輸出
4	40%功率輸出
3	30%功率輸出
2	20%功率輸出
1	10%功率輸出

B： 階段 2

按照不同的階段可以設置不同的烹調時間

1 設置階段 1

按照階段一中步驟 1、步驟 2 設置， 不要按“啓動”鍵

2 設置階段 2
按“記憶”鍵然後輸入合適的烹調時間和選擇不同的火力檔
3 按 “啓動”鍵
注意：當程序開始時，烹調顯示燈會自動亮起，在烹調和解凍程序完成後會發出 3 聲“嗶”音。如果爐門不被打開或“取消”鍵 没有被按下，微波爐將每隔兩分鐘自動發出三聲“嗶”音。

預置
如需要設置 2 點種啓動微波爐
步驟 1： 按“預置”鍵
2： 按數字鍵 2.0.0
3：設置烹調程序
4：按“啓動”鍵
注意：輸入預置程序前，必須將時鐘校正。

快速烹調
可利用此功能選 4 種慣用的烹調時間。
每次按下快速烹調 鍵，都可選擇以下幾種烹調時間
按 1 次－－－－－－ 15 秒
按 2 次－－－－－－ 30 秒
按 3 次－－－－－－ 1 分鐘
按 4 次－－－－－－ 2 分鐘
用 快速烹調 程序進行時，微波爐將以微波高火力烹調。
如想設置高火力（100%）烹調 1 分鐘時間
步驟 1：選擇**快速烹調按 3 次，1：00 即顯示**
2： 按“啓動”鍵

設置**快速解凍**
如想設置快速解凍 5 分 30 秒
步驟 1； 按“快速解凍”鍵
2：按“1 分鐘”鍵 5 次、“10 秒鐘”鍵 3 次
3： 按“啓動”鍵

設置**按重解凍**
注：各類食物的最高解凍重量如下：

按重解凍	食物種類	最高重量	顯示
按 1 次	肉類	2.3 千克	d1
按 2 次	家禽類	4.0 千克	d2
按 3 次	海鮮類	0.9 千克	d3

如想設置 600g 蝦
步驟 1： 按“按重解凍”鍵 3 次
2： 按“1 分鐘”鍵 6 次
3： 按“啓動”鍵
注意：如食物超出最高解凍重量，微波爐將不會啓動，這時應轉用 快速解凍 程序。

在烹調和解凍程序完成後，　微波爐將會每兩分鐘發出 3 聲‘嘀“的聲音直至打開陸門或按“取消”鍵。

程序烹調
微波爐可以組合幾種功能，如想設置下面烹調程序
1 **快速解凍**
2 第一步驟，100%火力烹調 5 分鐘
3 第二步驟，50%火力烹調 10 分鐘
步驟
1：按“取消”鍵
2：輸入快速解凍程序
3：　輸入時間 5 分鐘調整火力 100%烹調程序
4；　按‘記憶’鍵
5：輸入時間 10 分鐘和調整火力 50%烹調程序
6：按“開始”鍵
注意快速解凍和按重解凍衹能够在烹調之前選擇
當程序開始時，烹調顯示燈和爐燈便會亮起，程序完畢，微波爐將隔兩分鐘出現三聲‘嘀“聲。
設置“安全鎖”
用來防止兒童在没有成人知道的情況下使用微波爐，當兒童保險鎖啓動後，兒童保險鎖顯示燈會亮起，此時微波爐不能操作。

步驟：　1：　按“取消”鍵
2：　同時按數字鍵“5”和“7”鍵，嘀的一聲表明設置生效并有指示燈顯示
3：同時按數字鍵“5”和“7”，嘀的一聲表明設置生效。指示燈取消，安全鎖取消。
提示：
完成解凍或烹調程序後，如果爐門不被打開或取消鍵没有被按下，微波爐將每
隔兩分鐘自動發出三聲“嗶”音。

清潔維護

注　意：切勿使用强洗滌劑、香蕉水、汽油、研磨粉和金屬刷來清洗爐子的任何部位。
1、清洗爐腔之前，須關閉微波爐，并從插座上拔去電源綫插頭。
2、經常保持爐腔清潔。當食物或湯水濺到爐内壁時，可用濕布擦去。如爐内壁很臟則可使用軟性洗劑，切勿使用粗糙、磨損性的洗劑。
3、必須經常清潔玻璃盤。可先用温熱的肥皂水清洗　，再用清水洗净擦乾。
4、必須經常擦洗轉盤支承和爐腔底面。 請用軟性劑洗爐腔底面，而轉盤支承則可用温熱的肥皂水洗，清洗後抹乾放回原處。
5、必須經常清潔門的密封面。可先用軟乾布浸肥皂水清洗，再用軟乾布擦净。
6、微波爐外表面用軟乾布浸肥皂水清洗後，再用軟乾布擦净。注意不要讓水滲入爐縫或通風口。
7、如控制板被弄濕，則請用軟的乾布抹擦，不能用粗糙、磨損性的洗劑來擦控制板，擦控制面板時，請將爐打開，以免誤操作　。
8、爐内外如有蒸汽凝成的水滴，可用軟布擦净。
9、爐内如有异味，可用一杯水加幾匙檸檬汁煮 5 ~ 7 分鐘，即可消除。

10、 微波爐若長期不用，應拔掉電源插頭，放在通風乾燥,没有腐蝕性氣體的環境中。
11、 爐子發生故障,必須由本廠培訓的專業維修人員檢修,其它任何人拆修將是危險的。

Instructions for use

C2503

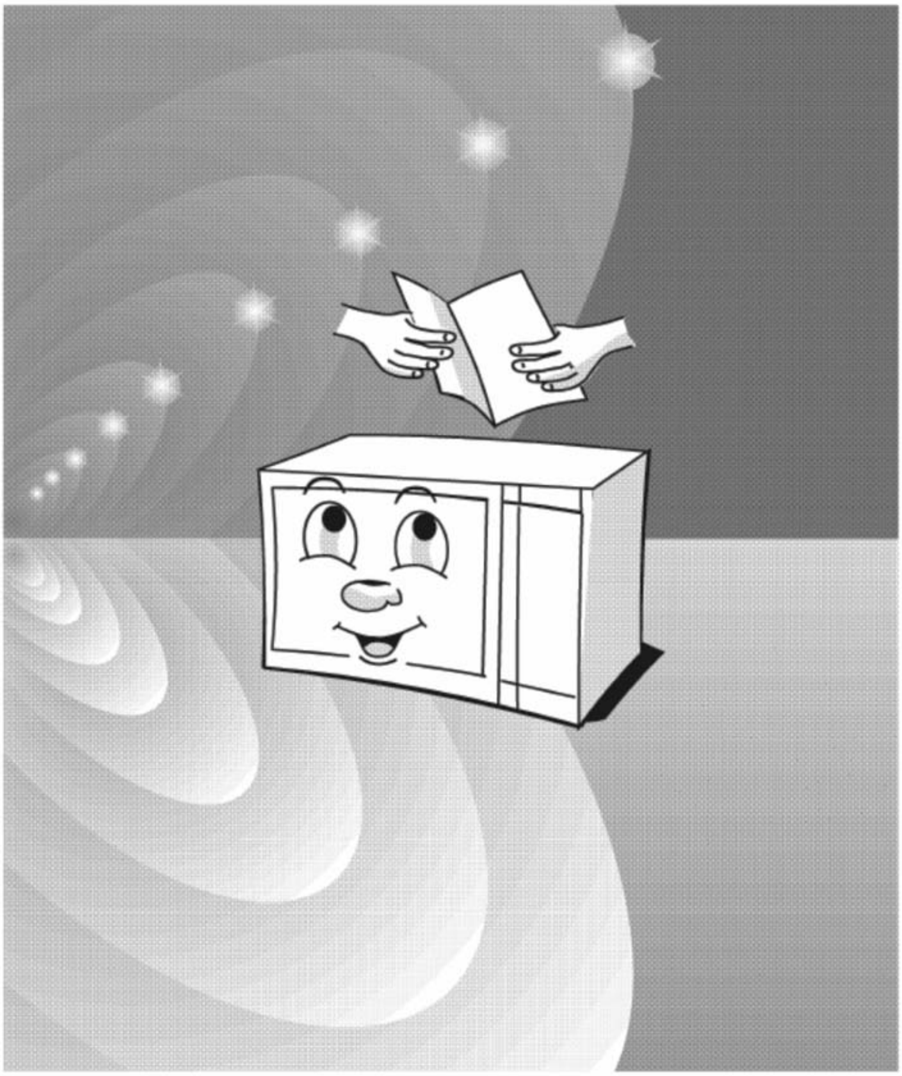

Whirlpool

Please read these instructions carefully and keep for future reference before installing and operating the oven.

CONTENTS

Precautions to Avoid Possible Exposure to Excessive Microwave Energy……………………1
Specifications………………………………...1
Before You Call for Service…………………2
Installation……………………………………2
Grounding Instructions.………………………2
Radio Interference……………………………3
Important Safety Instructions ………………. 3
Microwave Cooking Principles………………4
Utensils Guide…….………………………….5
Part Names ……….…………………………5
Control Panel…………………………………6
Operation Instructions………………………..7
Cleaning and Care…………………………..10

PRECAUTIONS TO AVOID POSSIBLE EXPOSURE TO EXCESSIVE MICROWAVE ENERGY

(a) Do not attempt to operate this oven with the door open since open-door operation can result in harmful exposure to microwave energy. It is important not to defeat or tamper with the safety interlocks.

(b) Do not place any object between the oven front face and the door or allows oil or cleaner residue to accumulate on sealing surfaces.

(c) Do not operate the oven if it is damaged. It is particularly important that the oven door close properly and that there is no damage to the :

① Door (bent),
② Hinges and latches (broken or loosened),
③ Door seals and sealing surfaces.

(d) The oven should not be adjusted or repair ed by anyone except properly qualified service personnel.

(e) WARNING: If the door or door seals are damaged, the oven must not be operated until it has been repaired by a competent person.

SPECIFICATIONS

Power Consumption:	230V~50Hz, 1400W
Rated Microwave Power Output:	900W
Operation Frequency:	2450MHz
Outside Dimensions:	310mm(H) x 508mm(W) x 440mm(D)
Oven Cavity Dimensions:	237mm(H) x 338mm(W) x 348mm(D)
Oven Capacity:	25Litres
Cooking Uniformity:	Turntable System{Φ314mm}
Net Weight:	Approx.16.3kg

BEFORE YOU CALL FOR SERVICE

If the oven fails to operate:

A) Check to ensure that the oven is plugged in securely. If it is not, remove the plug from the outlet, wait 10 seconds and plug it in again securely.

B) Check for a blown circuit fuse or a tripped main circuit breaker. If these seem to be operating properly, test the outlet with another appliance.

C) Check to ensure that the control panel is programmed correctly and the timer is set.

D) Check to ensure that the door is securely closed engaging the door safety lock system. Otherwise, the microwave energy will not flow into the oven.

IF NONE OF THE ABOVE RECTIFY THE SITUATION, THEN CONTACT A QUALIFIED TECHNICIAN. DO NOT TRY TO ADJUST OR REPAIR THE OVEN YOURSELF.

INSTALLATION

1. Make sure that all the packing materials are removed from the oven compartment.
2. WARNING: Check the oven for any damage, such as misaligned or bent door, damaged door seals and sealing surface, broken or loose door hinges and latches and dents inside the oven compartment or on the door. If there is any damage, do not operate the oven and contact a qualified service personnel.
3. This microwave oven must be placed on a flat, stable surface to hold its weight and the heaviest food likely to be cooked in the oven.
4. Do not place the oven where heat, moisture or high humidity are generated, or near combustible materials.
5. For correct operation, the oven must have sufficient airflow. Allow 20cm of space above the oven, 10cm at back and 5cm at both sides. Do not cover or block any openings on the appliance. Do not remove feet.
6. Do not operate the oven without glass tray, roller support, and shaft in their proper positions.
7. Make sure that the power supply cord is undamaged and does not run under the oven or over any hot or sharp surface.
8. The socket must be readily accessible so that it can be easily unplugged in an emergency.
9. Do not use the oven outdoors.

GROUNDING INSTRUCTIONS

This appliance must be grounded. This oven is equipped with a cord having a grounding wire with a grounding plug. It must be plugged into a wall receptacle that is properly installed and grounded. In

the event of an electrical short circuit, grounding reduces risk of electric shock by providing an escape wire for the electric current. It is recommended that a separate circuit serving only the oven be provided.

WARNING: Improper use of the grounding plug can result in a risk of electric shock.

Notes: 1.If you have any questions about the grounding or electrical instructions, consult a qualified electrician or service person.

2. Neither the manufacturer nor the dealer can accept any liability for damage to the oven or personal injury resulting from failure to observe the electrical connection procedures.

The wires in this mains cable are colored in accordance with the following code:

Green and Yellow = EARTH
Blue = NEUTRAL
Brown = LIVE

RADIO INTERFERENCE

1. Operation of the microwave oven can cause interference to your radio, TV or similar equipment.
2. When there is interference, it may be reduced or eliminated by taking the following measures:
   a. Clean door and sealing surface of the oven.
   b. Reorient the receiving antenna of radio or television.
   c. Relocate the microwave oven with respect to the receiver.
   d. Move the microwave oven away from the receiver.
   e. Plug the microwave oven into a different outlet so that microwave oven and receiver are on different branch circuits.

IMPORTANT SAFETY INSTRUCTIONS

WARNING: When using an electrical appliance basic safety precautions should be followed to reduce the risk of burns, electric shock, fire, injury to persons or exposure to excessive microwave energy.

1. Read all instructions before using the appliance.
2. Use this appliance only for its intended use as described in this manual. Do not use corrosive chemicals or vapors in this appliance. This type of oven is specifically designed to heat, cook or dry food. It is not designed for industrial or laboratory use.
3. Do not operate the oven when empty.
4. Do not operate this appliance if it has a damaged cord or plug, if it is not working properly or if it has been damaged or dropped. If the supply cord is damaged, it must be replaced by the manufacturer or its service agent or a similarly qualified person in order to avoid a hazard
5. WARNING: Only allow children to use the oven without supervision when adequate instructions

have been given so that the child is able to use the oven in a safe way and understands the hazards of improper use.

6. To reduce the risk of fire in the oven cavity:
   a. When heating food in plastic or paper container, keep an eye on the oven due to the possibility of ignition.
   b. Remove wire twist-ties from paper or plastic bags before placing bag in oven.
   c. If smoke is observed, switch off or unplug the appliance and keep the door closed in order to stifle any flames.
   d. Do not use the cavity for storage purposes. Do not leave paper products, cooking utensils or food in the cavity when not in use.
7. WARNING: Liquid or other food must not be heated in sealed containers since they are liable to explode.
8. Microwave heating of beverage can result in delayed eruptive boiling, therefore care has to be taken when handle the container.
9. Do not fry food in the oven. Hot oil can damage oven parts and utensils and even result in skin burns.
10. Eggs in their shell and whole hard-boiled eggs should not be heated in microwave ovens since they may explode even after microwave heating has ended.
11. Pierce foods with heavy skins such as potatoes, whole squashes, apples and chestnuts before cooking.
12. The contents of feeding bottles and baby jars should be stirred or shaken and the temperature should be checked before serving in order to avoid burns.
13. Cooking utensils may become hot because of heat transferred from the heated food. Potholders may be needed to handle the utensil.
14. Utensils should be checked to ensure that they are suitable for use in microwave oven.
15. **WARNING:** It is hazardous for anyone other than a trained person to carry out any service or repair operation which involves the removal of any cover which gives protection against exposure to microwave energy.
16. Do not use your microwave for drying textiles, paper, spices, herbs, wood, flowers, fruit or other combustible materials. Fire could result If material inside/outside the oven should ignite or smoke is observed, keep oven door closed and turn the oven off. Disconnect the power cord or shut off power at the fuse or circuit breaker panel.
17. Do not over-cook food. Fire could result.
18. Do not leave the oven unattended, especially when using paper, plastic or other combustible materials in the cooking process. Paper can char or burn and some plastics can melt if used when heating foods.
19. The ventilation openings on the oven must not be covered. Blocking the air intake or exhaust vents may cause damage to the oven and poor cooking results.

MICROWAVE COOKING PRINCIPLES

1. Arrange food carefully. Place thickest areas towards outside of dish.
2. Watch cooking time. Cook for the shortest amount of time indicated and add more as needed. Food severely overcooked can smoke or ignite.
3. Cover foods while cooking. Covers prevent

spattering and help foods to cook evenly.

4. Turn foods over once during microwaving to speed cooking of such foods as chicken and hamburgers. Large items like roasts must be turned over at least once.
5. Rearrange foods such as meatballs halfway through cooking both from top to bottom and from the center of the dish to the outside.
6. Always refer to a microwave cookbook for details. especially if cooking or reheating food that contains alcohol.

UTENSILS GUIDE

1. The ideal material for a microwave utensil is transparent to microwave, it allows energy to pass through the container and heat the food.
2. Microwave can not penetrate metal, so metal utensils or dishes with metallic trim should not be use.
3. Do not use recycled paper products when microwave cooking, as they may contain small metal fragments which may cause sparks and/or fires.
4. Round /oval dishes rather than square/oblong ones are recommended, as food in corners tends to overcook.

The list below is a general guide to help you select the correct utensils.

Cookware	Microwave Cooking
Heat–Resistant Glass	Yes
Non Heat–Resistant Glass	No
Heat–Resistant Ceramics	Yes
Microwave–Safe Plastic Dish	Yes
Kitchen Paper	Yes
Metal Tray	No
Metal Rack	No
Aluminum Foil & Foil Containers	No

PART NAMES

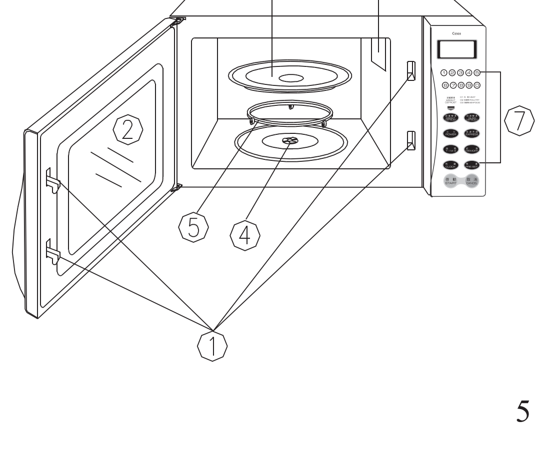

① Door Safety Lock System
② Oven Window
③ Oven Air Vent
④ Shaft
⑤ Roller Ring
⑥ Glass Tray
⑦ Control Panel

CONTROLPANEL

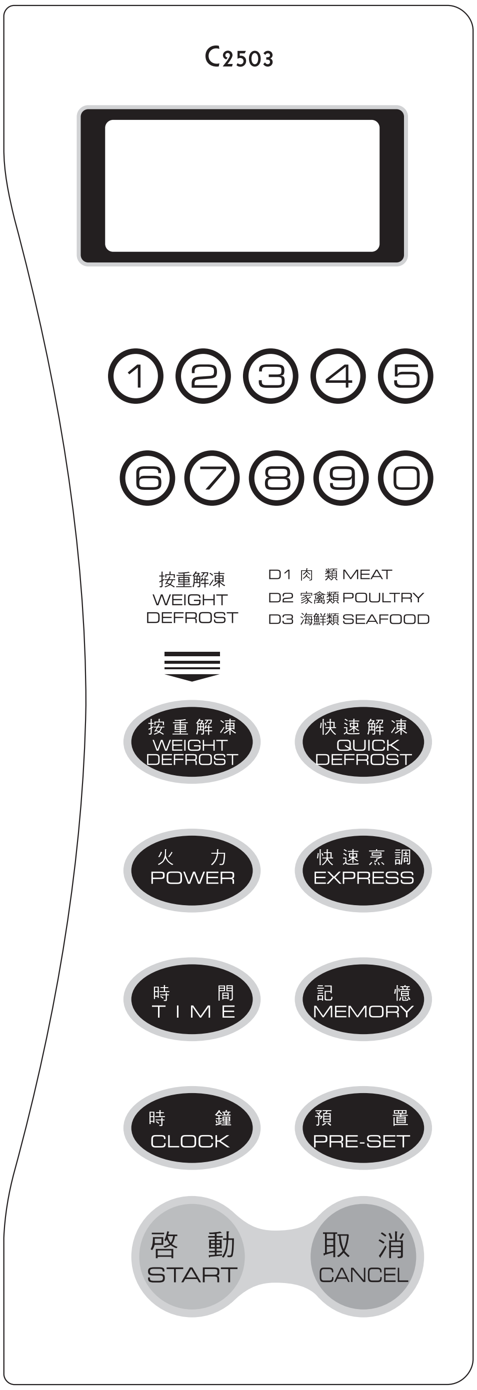

(Also see following pages for more detail.)

DISPLAY

Cooking time, power, indicators and present time are displayed.

NUMBER PADS (0-9)

Touch to set times or weights.

WEIGHT DEFROST

Use to defrost frozen meat, poultry and seafood by weight. The defrosting time and power level are automatically set once the food category and the weight are programmed.

QUICK DEFROST

Touch to set defrosting time; the oven automatically divides the defrosting time into periods of alternating defrost and stand times by cycling on and off.

POWER

Use to set power level. To check power level during time cooking, touch POWER pad.

PRE-SET

Use to set the oven to start-up at alater time. The pre-set indicator will flicker when the oven is in the PRE-SET state. The clock must be set before the pre-set function can be programmed.

CLOCK

Use to set the time of day or recall the time of day. The time of day will be displayed at all times except when the oven is operating. In the event of a power failure or if the oven is unplugged, the clock will have to be reset.

CANCEL

Touch to cancel the selected power level, cook or defrost times that previously programmed. But the time of day clock cannot be cancelled.

MEMORY

When programming the oven to cook by time, use the MEMORY pad when setting both the 1st and the 2nd cooking stage. The respective lights will come on to indicate which stage the oven is operating in.

TIME

Use to set cooking time. Allows you to set up to 99 minutes and 99 seconds.

EXPRESS

Use this feature to program the oven for 4 popular microwave timings. The oven will operate at HIGH power (100% power output) for EXPRESS cooking program.

START

Touch to start the cooking or defrosting programs. The cooking indicator light and the oven light will turn on and the cooling fan will operate.

OPERATION INSTRUCTIONS

BEEP DURING OVEN SETTINGS

Each time a pad is touched, a beep will sound to acknowledge the touch.

SETTING THE CLOCK

1. Touch CLOCK pad.
2. Touch CANCEL pad.
3. Use the number pads to enter the correct time. You must touch at least three numbers to set the clock(one for hour and two for minutes).
4. Touch CLOCK pad again.

NOTE:

This is a 12-hour clock. When the oven was plugged in, “1:01” should have appeared in the display. To reset the time of day, repeat the steps given above. You can check the clock time while cooking is in progress by touching the CLOCK pad.

SETTING THE OVEN TIMER

1. Touch TIME pad.
2. Enter the amount of time you want to count down by touching the number pads. Digit time is in minutes and seconds and set left to right. Set one digit (a 5 for 5 seconds) or up to four digits (2405 for 24 minutes, 5 seconds).
3. Touch POWER pad.
4. Touch number pad 0.
5. Touch START pad.

NOTE:

- Touch TIME and then touch CANCEL to cancel TIME during timing process.

SETTING COOKING TIMES AND POWER LEVELS

A. One-stage Cooking

1. Touch TIME pad.
2. Use the number pads to set a cooking time. You can set a cooking time from one seconds to 99 minutes and 99 seconds. If you are setting a time greater than one minute, you must enter numbers for both minutes and seconds. For example, to set 20 minutes, enter 2,0,0,0.
3. If you want to set a power level other than 100% power, touch POWER, then use the number pads to enter the power level. You can set the power level from 1 to 9.
4. Touch START to start cooking.

USE THESE SINGLE DIGIT TO REPRESENT POWER LEVELS	
Number pad	% of Power
9	90%
8	80%
7	70%
6	60%
5	50%
4	40%
3	30%
2	20%
1	10%

B. Two-stage Cooking

Some recipes require different stages of cooking at different temperatures.

1. SET STAGE 1:
   Follow steps 1 and 2 in "One-stage Cooking".
   DO NOT TOUCH START PAD.
2. SET STAGE 2:
   Touch MEMORY pad then enter proper cooking time and (lower) power level. (Most 2-stage recipes use lower power for second stage.)
3. Touch START pad.

NOTE:

- The respective lights will come on to indicate which stage the oven is operating in. After total time has elapsed, 3 beeps sound. After a cooking or defrosting program has completed, the oven will automatically continue to sound three beeps every two minutes until the door is opened or the CANCEL pad is touched.

PRE-SET

Suppose you want to set the oven to start-up at 2 o'clock.

Step : 1. Touch PRE-SET pad.
2. Touch numeral pads 2.0.0.
3. Set the cooking programs.
4.Touch START pad.

NOTE:

Be sure the time of day clock is set at the correct time before programming PRE-SET.

EXPRESS

Use this feature to program the oven for 4 popular microwave timings.

With each touch of the EXPRESS pad you can program the oven for :

15 seconds ………TOUCH ONCE
30 seconds……….TOUCH TWICE
1 minute……….TOUCH 3 TIMES
2 minutes………TOUCH 4 TIMES

The oven will operate at HIGH power (100% power output) for EXPRESS cooking program.

Suppose you want to set the oven to cook for 1 minute at 100% by using the feature:

Step : 1.Touch the EXPRESS pad 3 times then "1:00"will appear in the display.

2.Touch START pad.

SETTING"QUICK DEFROST"

1.Touch QUICK DEFROST pad.

2.Enter desired defrosting time by touching correct number pads. Digital timer sets minutes and seconds from left to right so a single digit can be set (5 for 5 seconds) or up to 4 digits (2405 for 24 minutes 5 seconds).

3.Touch START pad.

SETTING"WEIGHT DEFROST"

Suppose you want to defrost 600g shrimp.

1.Touch WEIGHT DEFROST pad 3 times. "d3" will appear in the display

2.Touch number pads 6.0.0.

3.Touch START pad.

NOTE: The maximum allowable weight for each category is shown below .

FOOD CATEGORY	MAXIMUM WEIGHT	DISPLAY
Meat	2300g	d1
Poultry	4000g	d2
Seafood	900g	d3

For foods exceeding these maximum weights, use the QUICK DEFROST program. If you program weight in excess of the maximum recommended, the oven will not operate properly .

PROGRAM COOKING

The oven has the ability to be programmed to do several consecutive functions.

Suppose you want set the following cooking program :

1. QUICK DEFROST;
2. 1st stage: Cook for 5 minutes at 100%;
3. 2nd stage: Cook for 10 minutes at 50%.

Step: 1.Touch CANCEL pad.

2.Input quick defrost program.

3. Input time (5 minutes) and power level (100%)cooking program.

4.Touch MEMORY pad.

5. Input time (10 minutes) and power level (50%) cooking program.

6.Touch START pad.

NOTE: QUICK DEFROST and WEIGHT DEFROST can only be selected before the cooking stage in a program . It can not be selected between or after stage1 or stage 2.

SETTING"SAFETYLOCK"

The safety lock prevents unsupervised operation by little children. To set, press and hold number pads 5 and 7 at the same time, a beep sounds and LOCK indicator lights.To cancel, press and hold number pads 5 and 7 at the same time, a beep sounds and LOCK indicator goes off.

TO STOP THE OVEN WHILE THE OVEN IS OPERATING

Open the door .

You can restart the oven by closing the door and touching START pad.

NOTE:

- Oven stops operating when door is opened.

CLEANING AND CARE

1. Turn off the oven and remove the power plug from the wall socket before cleaning.
2. Keep the inside of the oven clean. When food splatters or spilled liquids adhere to oven walls, wipe with a damp cloth. Mild detergent may be used if the oven gets very dirty. Avoid the use of spray and other harsh cleaners as they may stain, streak or dull the door surface.
3. The outside surfaces should be cleaned with a damp cloth. To prevent damage to the operating parts inside the oven, water should not be allowed to seep into the ventilation openings.
4. Wipe the door and window on both sides, the door seals and adjacent parts frequently with a damp cloth to remove any spills or spatters. Do not use abrasive cleaner.
5. Do not allow the control panel to become wet. Clean with a soft, damp cloth. When cleaning the control panel, leave oven door open to prevent oven from accidentally turning on.
6. If steam accumulates inside or around the outside of the oven door, wipe with a soft cloth. This may occur when the microwave oven is operated under high humidity conditions, this is normal.
7. It is occasionally necessary to remove the glass tray for cleaning. Wash the tray in warm sudsy water or in a dishwasher.
8. The roller ring and oven floor should be cleaned regularly to avoid excessive noise. Simply wipe the bottom surface of the oven with mild detergent. The roller ring may be washed in mild sudsy water or dishwasher. When removing the roller ring from cavity floor for cleaning, be sure to replace in the proper position.
9. Remove odors from your oven by combining a cup of water with the juice and skin of one lemon in a deep microwaveable bowl, microwave for 5 minutes. Wipe thoroughly and dry with a soft cloth.
10. When it becomes necessary to replace the oven light, please consult a dealer to have it replaced.
11. The oven should be cleaned regularly and any food deposits removed. Failure to maintain the oven in a clean condition could lead to deterioration of the surface that could adversely affect the life of the appliance and possibly result in a hazardous situation.